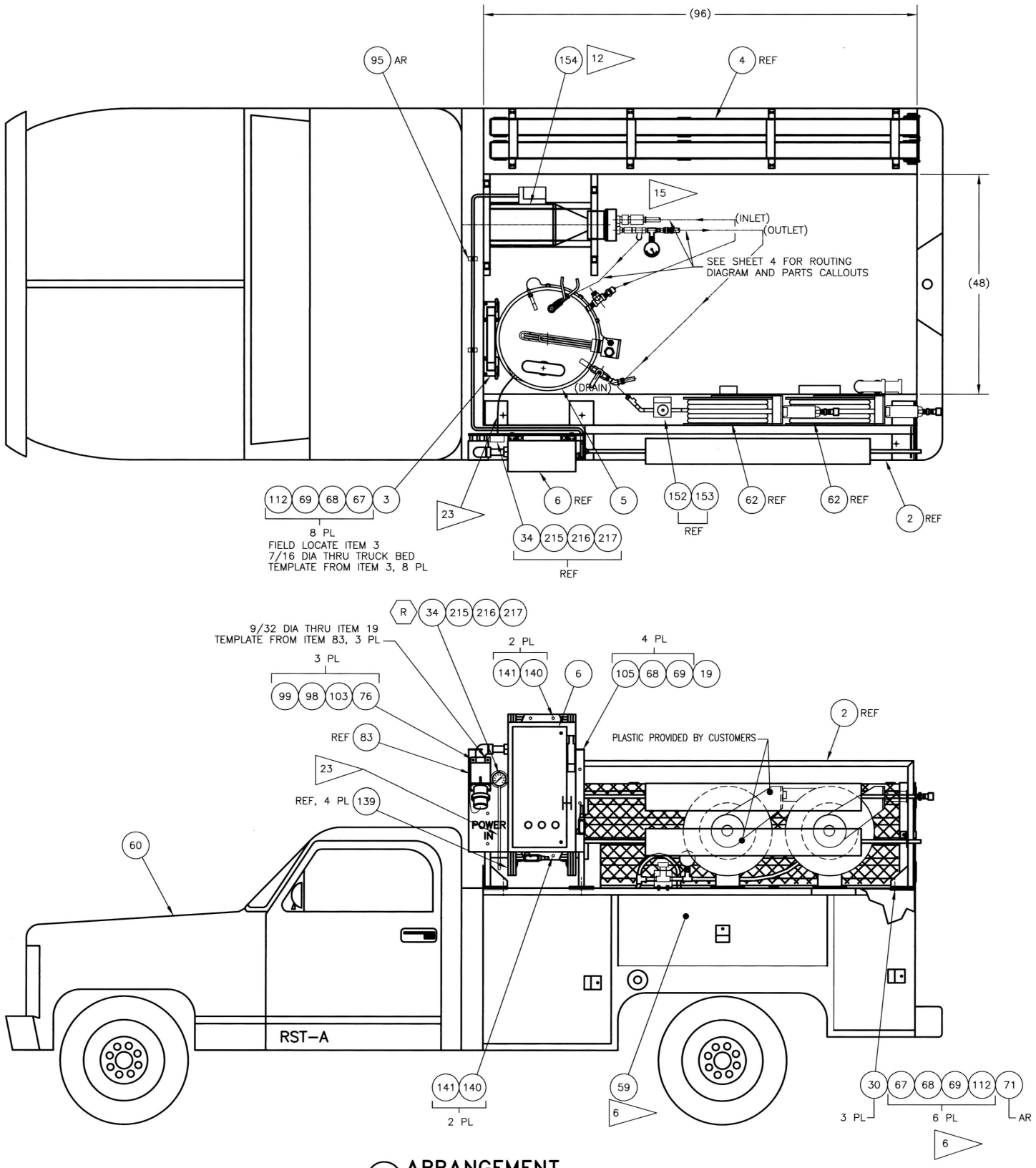

1 ARRANGEMENT
SCALE: NONE

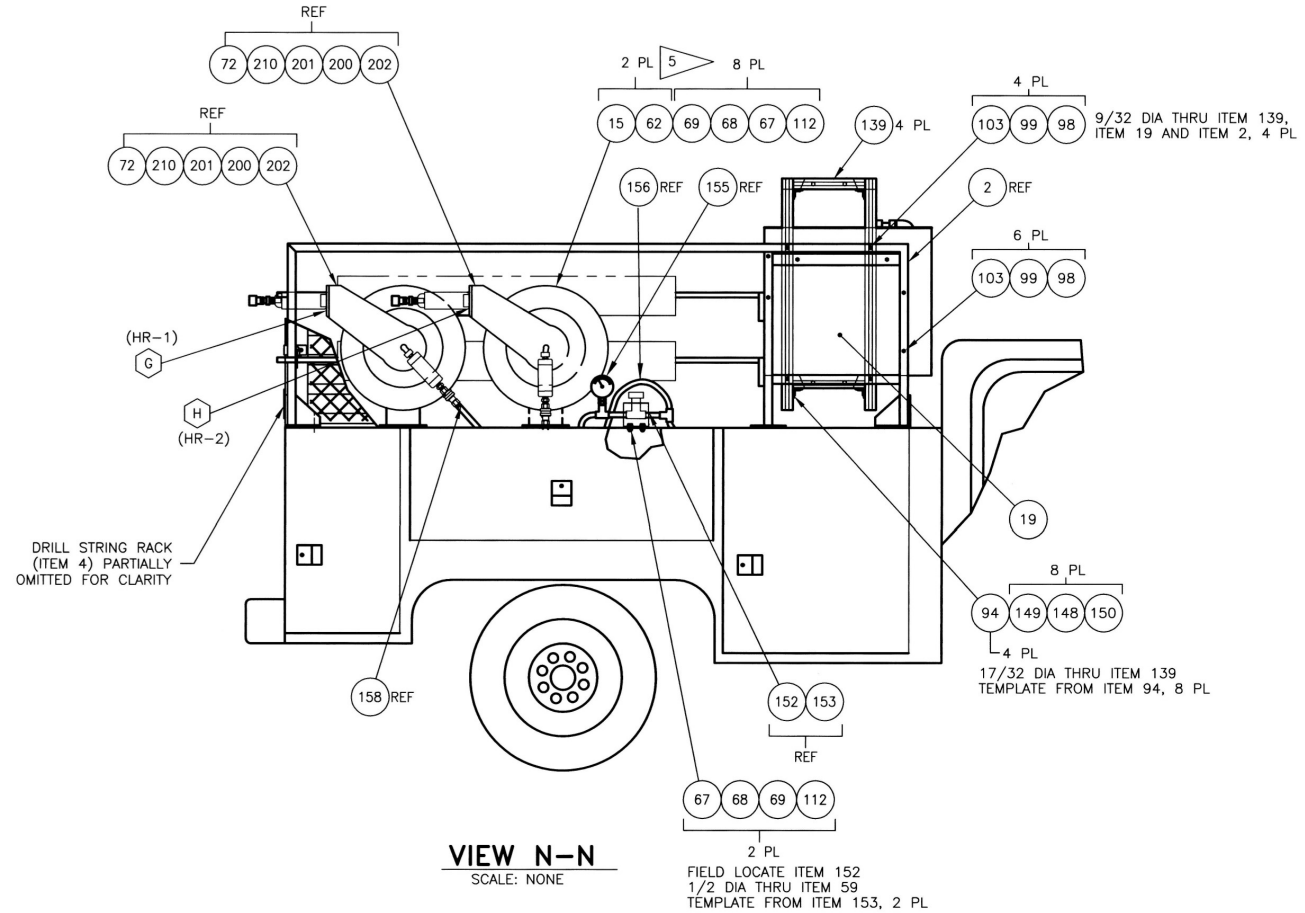

VIEW N-N
SCALE: NONE

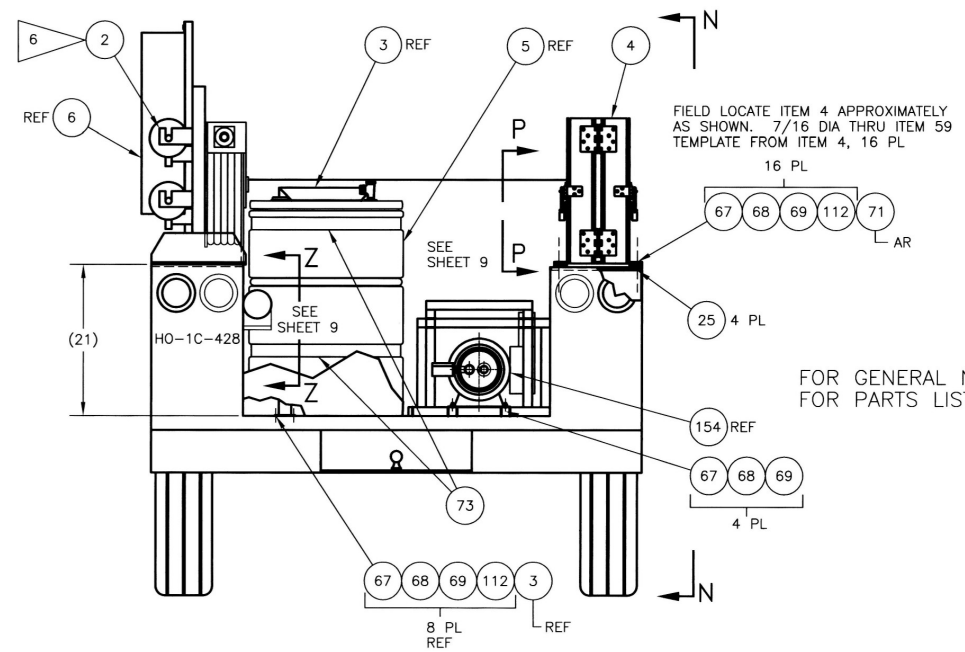

FOR GENERAL NOTES SEE SHEET 2
FOR PARTS LIST SEE SHEET 1 & 2

THIS SPACE RESERVED FOR BUILDING AND INDEX NUMBERS

BLDG. NO.

INDEX NO.

DWG NO H-2-829939 SH 3 OF REV 2

DATE JUN 18 2002 STA 3 HANFORD RELEASE ID: 25

DWG NO	TITLE
DRAWING TRACEABILITY LIST	

REF NUMBER	TITLE
REFERENCES	
NEXT USED ON	

REV REL	REV NO	DESCRIPTION	REV BY DATE	ENGR COMPANY
RS	2	664434 & 668513 660733, 664423, 664427, REVISED PER ECN 660700,	RLM 5/02	

REVISIONS

NAME	DATE	COMPANY
DRAWN BY PM McELROY	9/20/99	COGEMA
CHECKED RL MILLER	12/99	FFS
DRFG APVD H SHUMAKE JR	12/99	COGEMA
CODE ENG RN DALE	12/99	CHG
DESIGN AUTHORITY GP JANICEK	1/00	LMHC

U.S. DEPARTMENT OF ENERGY
Office of River Protection

CORE SAMPLER
SUPPORT TRUCK
RST-A

SIZE	BLDG NO	INDEX NO	DWG NO	REV
F	200G	3902	H-2-829939	2

SCALE SHOWN EDT 624168 SHEET 3 OF

16353 DOE_TB_F.DWG (01-01)