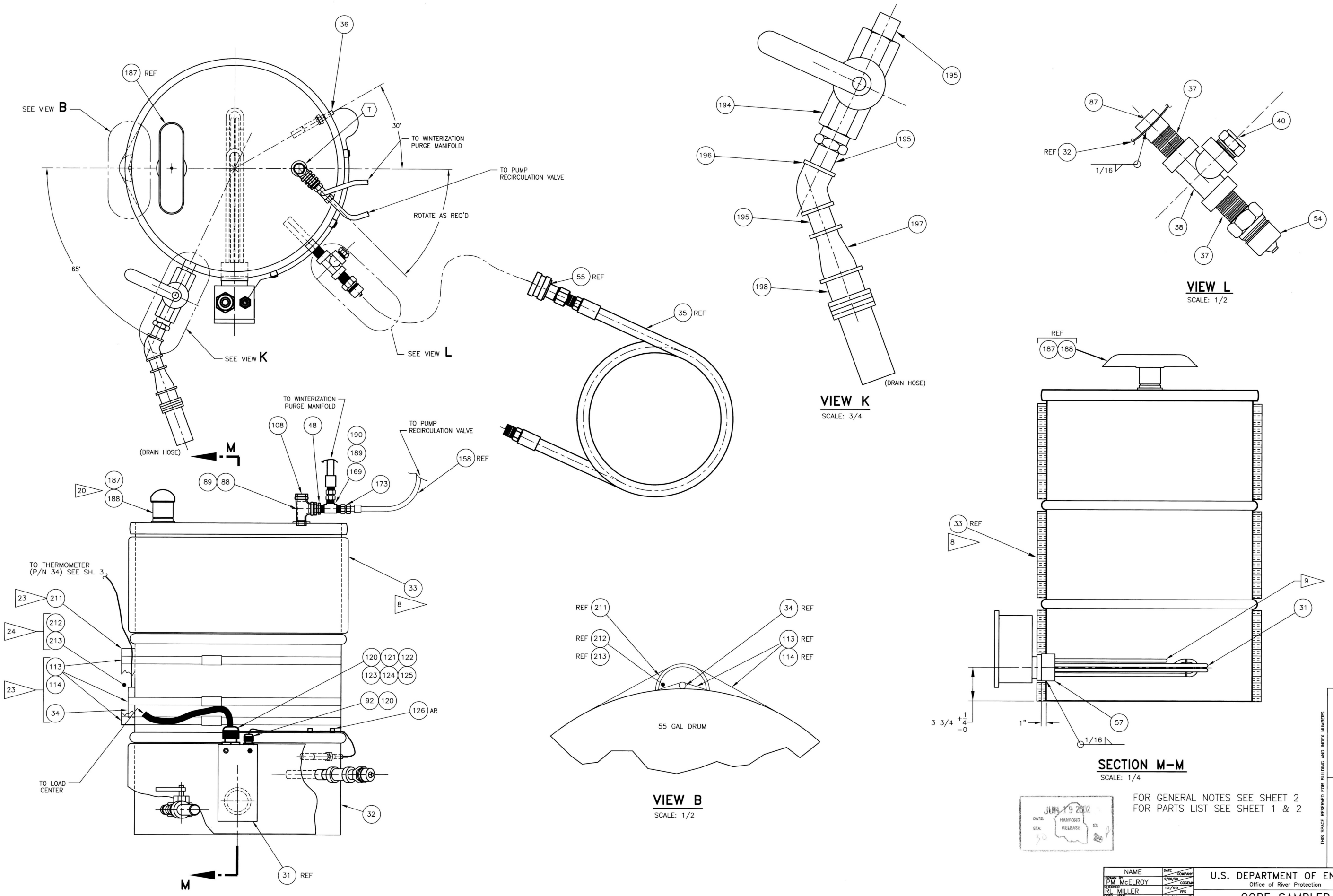

5 DRUM HEATER ASSEMBLY
SCALE: 1/4

VIEW K
SCALE: 3/4

VIEW L
SCALE: 1/2

VIEW B
SCALE: 1/2

SECTION M-M
SCALE: 1/4

FOR GENERAL NOTES SEE SHEET 2
FOR PARTS LIST SEE SHEET 1 & 2

JUN 19 2002 DATE: HANFORD RELEASE STA: 30 ID:

DWG NO	TITLE
DRAWING TRACEABILITY LIST	

REF NUMBER	TITLE
REFERENCES	
NEXT USED ON	

REV NO	DESCRIPTION	REV BY DATE	ENGR	COMPANY
2	660738 & 664423 REVISED PER ECN 660700,	RLM 5/02		

REVISIONS

NAME	DATE	COMPANY
DRAWN BY PM McELROY	9/20/99	COGEMA
CHECKED RL MILLER	12/99	FFS
APPD ENG H SHUMAKE JR	12/99	COGEMA
DOC ENG RN DALE	12/99	CHG
DESIGN AUTHORITY GP JANICEK	1/00	LMHC

U.S. DEPARTMENT OF ENERGY
Office of River Protection

CORE SAMPLER
SUPPORT TRUCK
RST-A

SIZE	BLDG NO	INDEX NO	DWG NO	REV
F	200G	3902	H-2-829939	2

SCALE SHOWN EDT 624168 SHEET 5 OF

21312 DOE_TB_F.DWG (01-01)

THIS SPACE RESERVED FOR BUILDING AND INDEX NUMBERS

BLDG. NO.

INDEX NO.

DWG NO H-2-829939 SH 5 OF REV 2