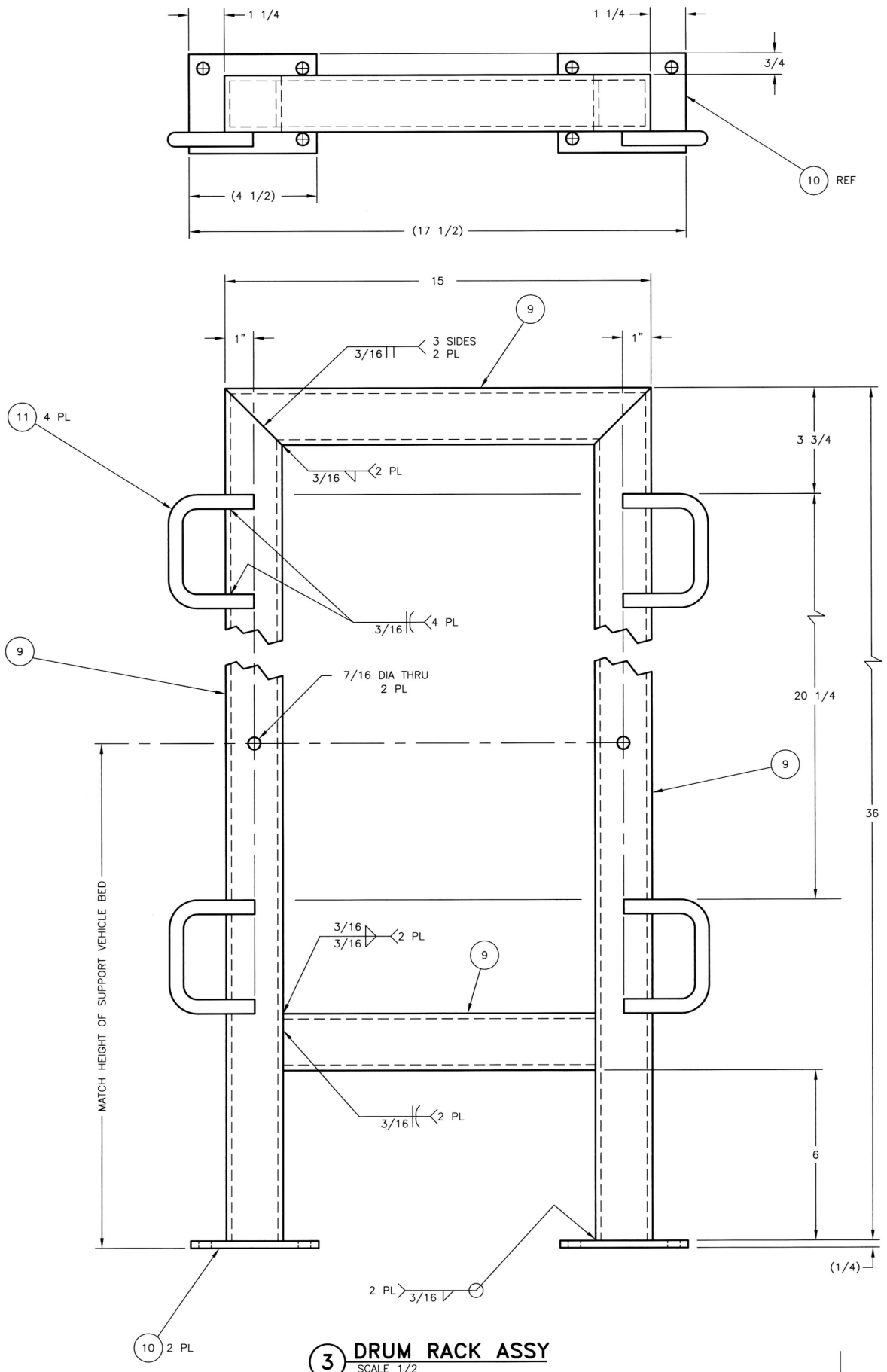

3 **DRUM RACK ASSY**
SCALE 1/2
(A3, SH 3)

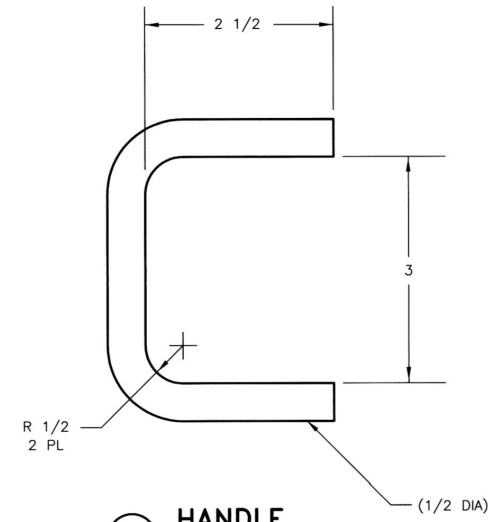

11 **HANDLE**
SCALE 1/1

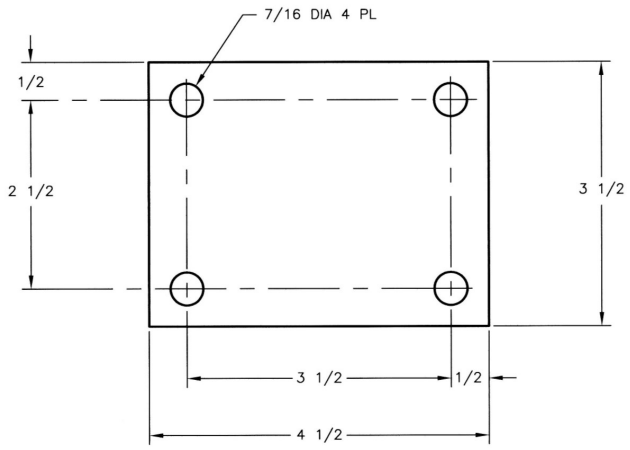

10 **PLATE**
SCALE 1/1

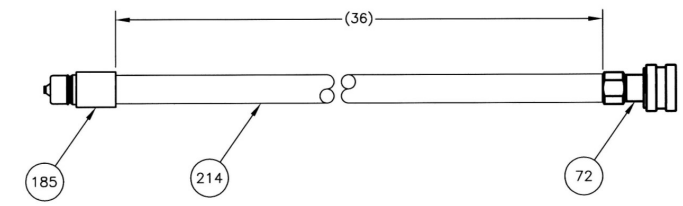

26 7 **HOSE EXTENSION ASSY (OPTIONAL)**
SCALE: 1/1

FOR GENERAL NOTES SEE SHEET 2
FOR PARTS LIST SEE SHEET 1 & 2

JUN 19 2002 DATE: HANFORD RELEASE STA: 30 IDX:

THIS SPACE RESERVED FOR BUILDING AND INDEX NUMBERS

BLDG. NO.

INDEX NO.

DWG NO	TITLE
DRAWING TRACEABILITY LIST	

REF NUMBER	TITLE
NEXT USED ON	REFERENCES

REV NO	DESCRIPTION	REV BY DATE	ENGR	COMPANY
2	REVISED PER ECN 664434	RLM 5/02		

REVISIONS

	NAME	DATE	COMPANY
DRAWN BY	PM McELROY	9/20/99	COGEMA
CHECKED	RL MILLER	12/99	FFS
DWG APPR	H SHUMAKE JR	12/99	COGEMA
CDE DWG	RN DALE	12/99	CHG
DESIGN AUTHORITY	CP JANICEK	1/00	LMHC

U.S. DEPARTMENT OF ENERGY
Office of River Protection

CORE SAMPLER
SUPPORT TRUCK
RST-A

SIZE	BLDG NO	INDEX NO	DWG NO	REV
F	200G	3902	H-2-829939	2
SCALE	SHOWN	EDT	624168	SHEET 6 OF

DOE_TB_F.DWG (01-01)

2638

DWG NO H-2-829939 SH 6 OF REV 2