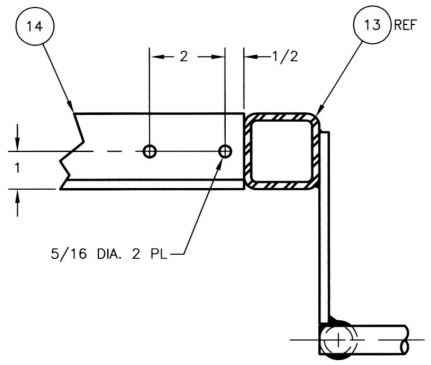

SECTION C-C
SCALE: 1/2

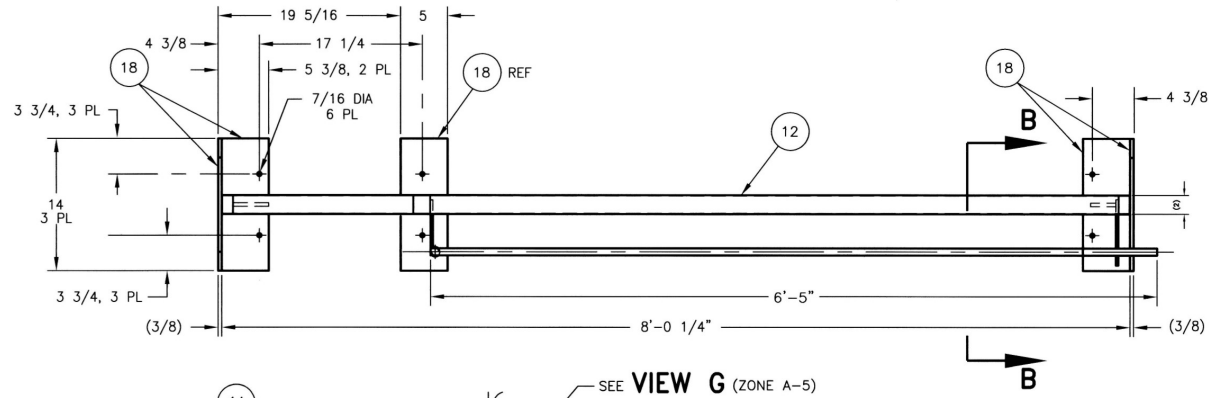

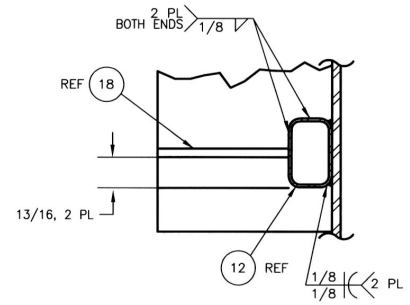

SECTION F-F
SCALE: 1/2

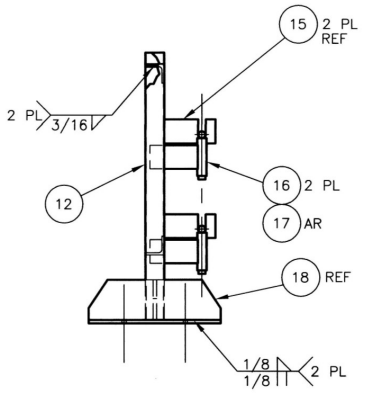

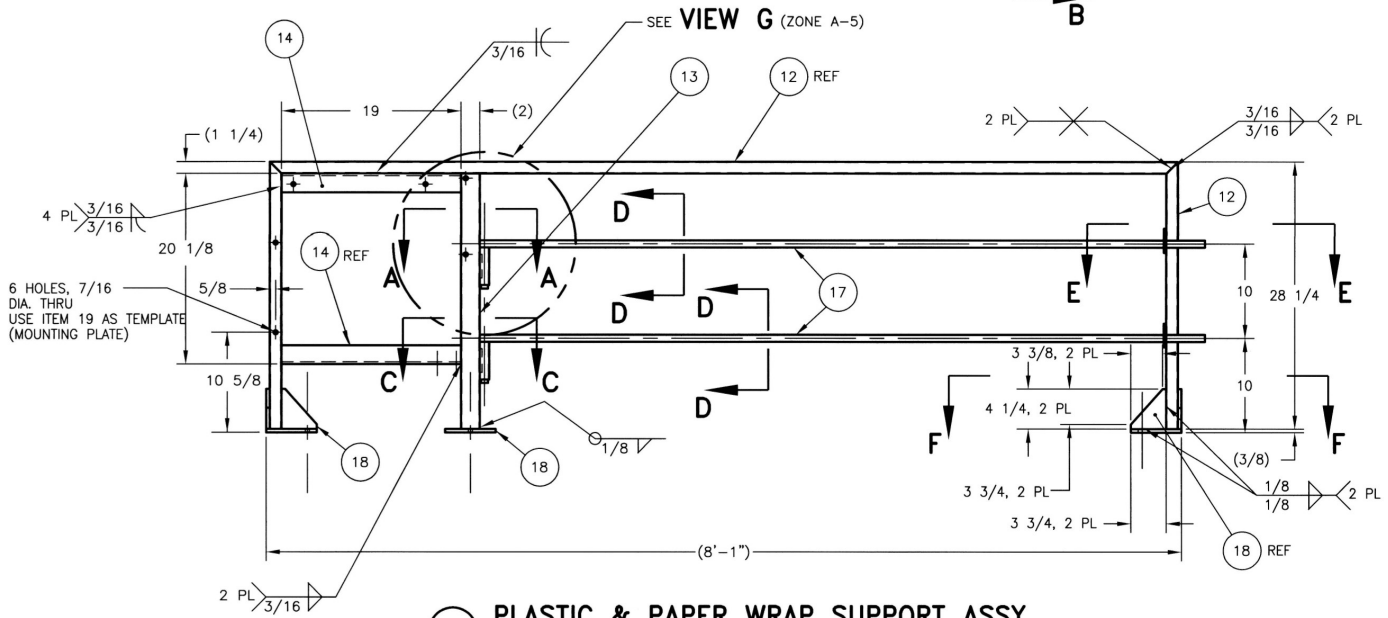

2 PLASTIC & PAPER WRAP SUPPORT ASSY
SCALE: 1/8

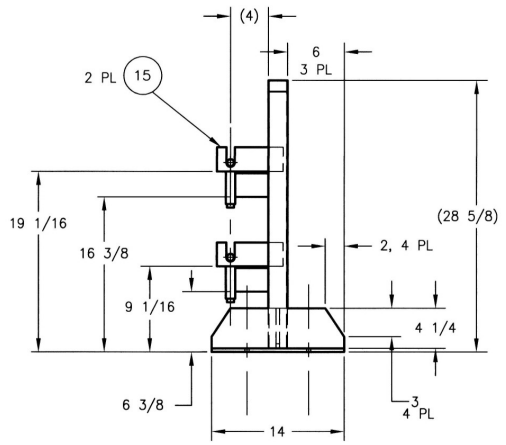

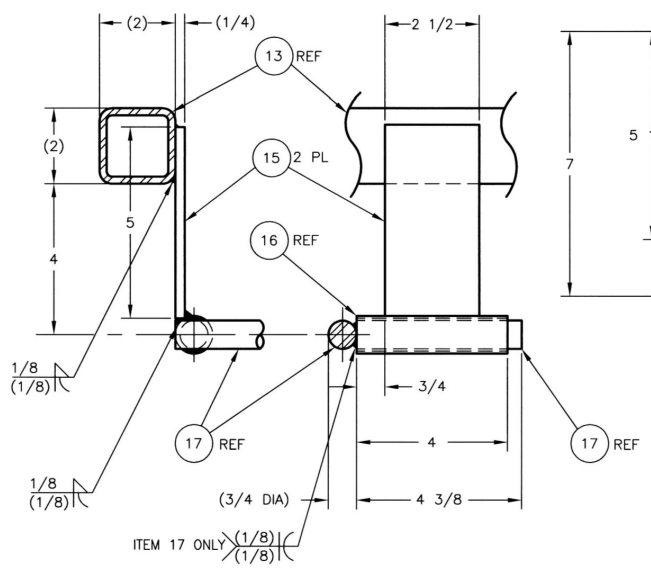

SECTION A-A
SCALE: 1/2
2 PLACES

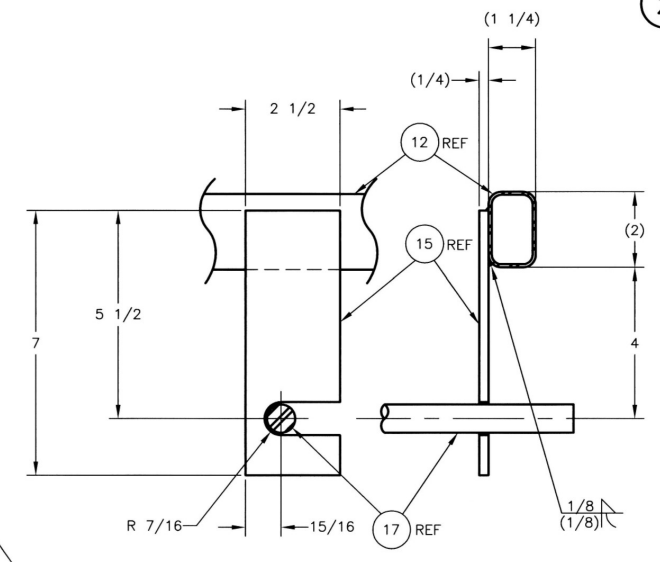

SECTION B-B
SCALE: 1/2
2 PLACES

SECTION E-E
SCALE: 1/2
2 PLACES

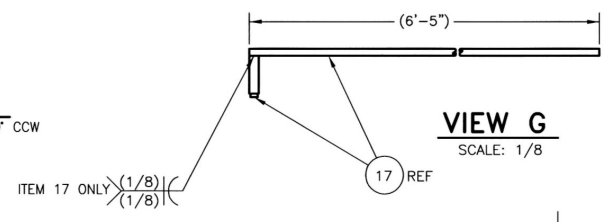

VIEW G
SCALE: 1/8

SECTION D-D
SCALE: 1/2 ROTATED 90° CCW
2 PLACES

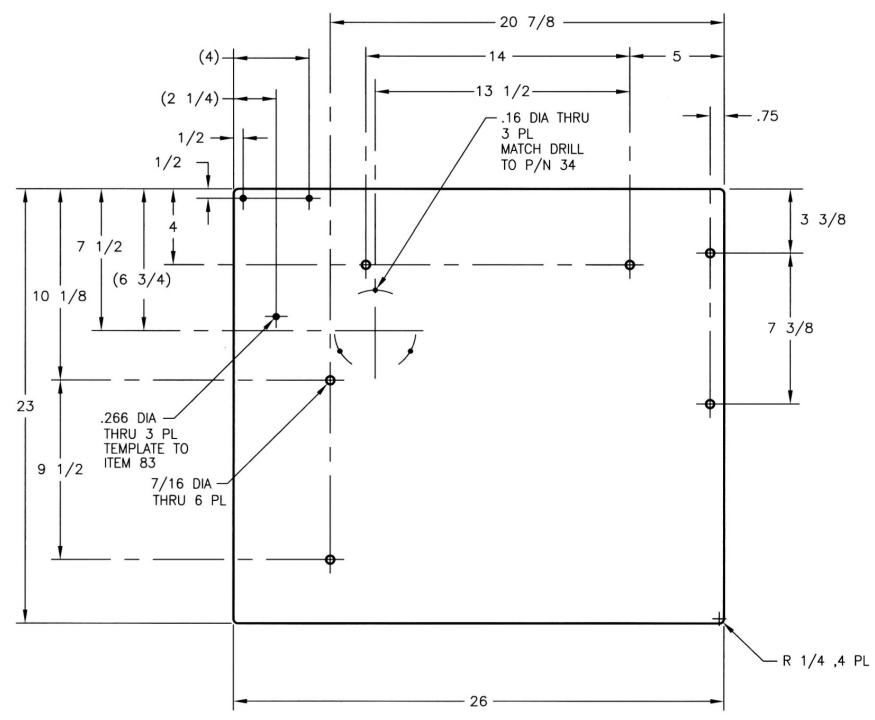

19 MOUNTING PLATE
SCALE: 1/4
SEE NOTE IN ZN D6

FOR GENERAL NOTES SEE SHEET 2
FOR PARTS LIST SEE SHEET 1 & 2

JUN 14 2002
DATE: STA: 3 MANFORD RELEASE IC: 35

THIS SPACE RESERVED FOR BUILDING AND INDEX NUMBERS

BLDG. NO.

INDEX NO.

DWG NO	TITLE
DRAWING TRACEABILITY LIST	

REF NUMBER	TITLE
NEXT USED ON	REFERENCES

REV NO	DESCRIPTION	REV BY DATE	ENGR COMPANY
2	REVISED PER ECN-664423	RLM 5/02	

REVISIONS

NAME	DATE	COMPANY
DRAWN BY PM McELROY	9/20/95	COGEMA
CHECKED RL MILLER	12/99	FTS
DATE ISSUED H. SHUMAKE JR	12/99	COGEMA
DOC DIV RN DALE	12/99	CHG

U.S. DEPARTMENT OF ENERGY
Office of River Protection

CORE SAMPLER
SUPPORT TRUCK
RST-A

SIZE	BLDG NO	INDEX NO	DWG NO	REV
F	200G	3902	H-2-829939	2

DESIGN AUTHORITY GP JANICEK 1/00 LMHC
SCALE SHOWN EDIT 624168 SHEET 7 OF
14775
DOE_TB_F.DWG (01-01)

DWG NO H-2-829939 SH 7 OF REV 2