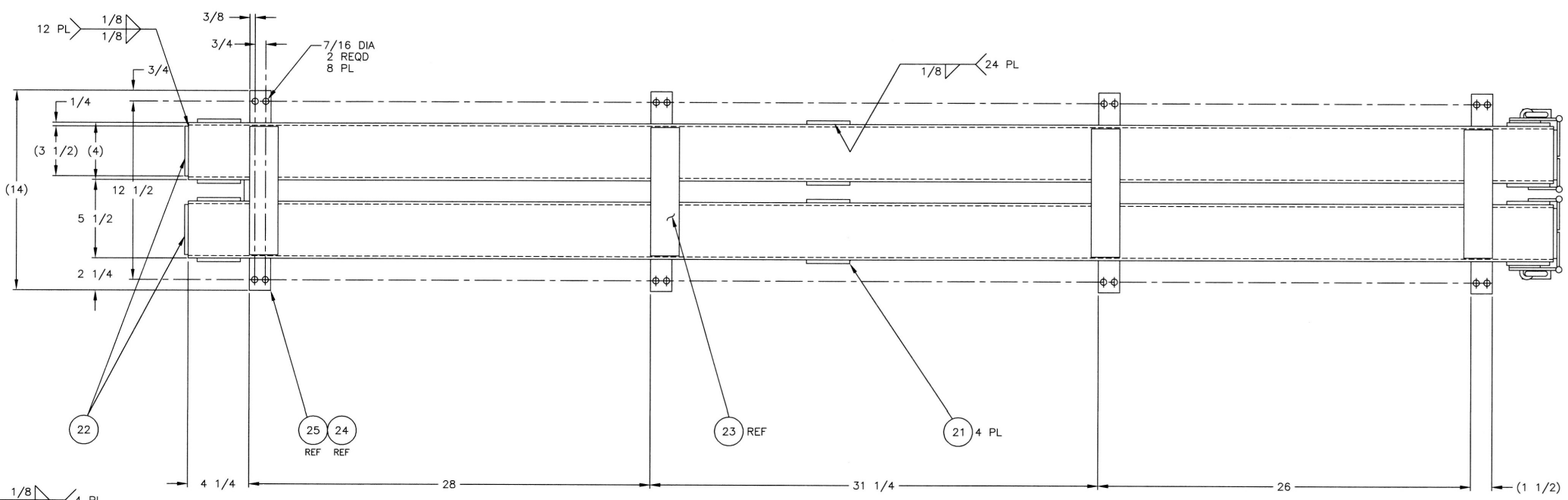

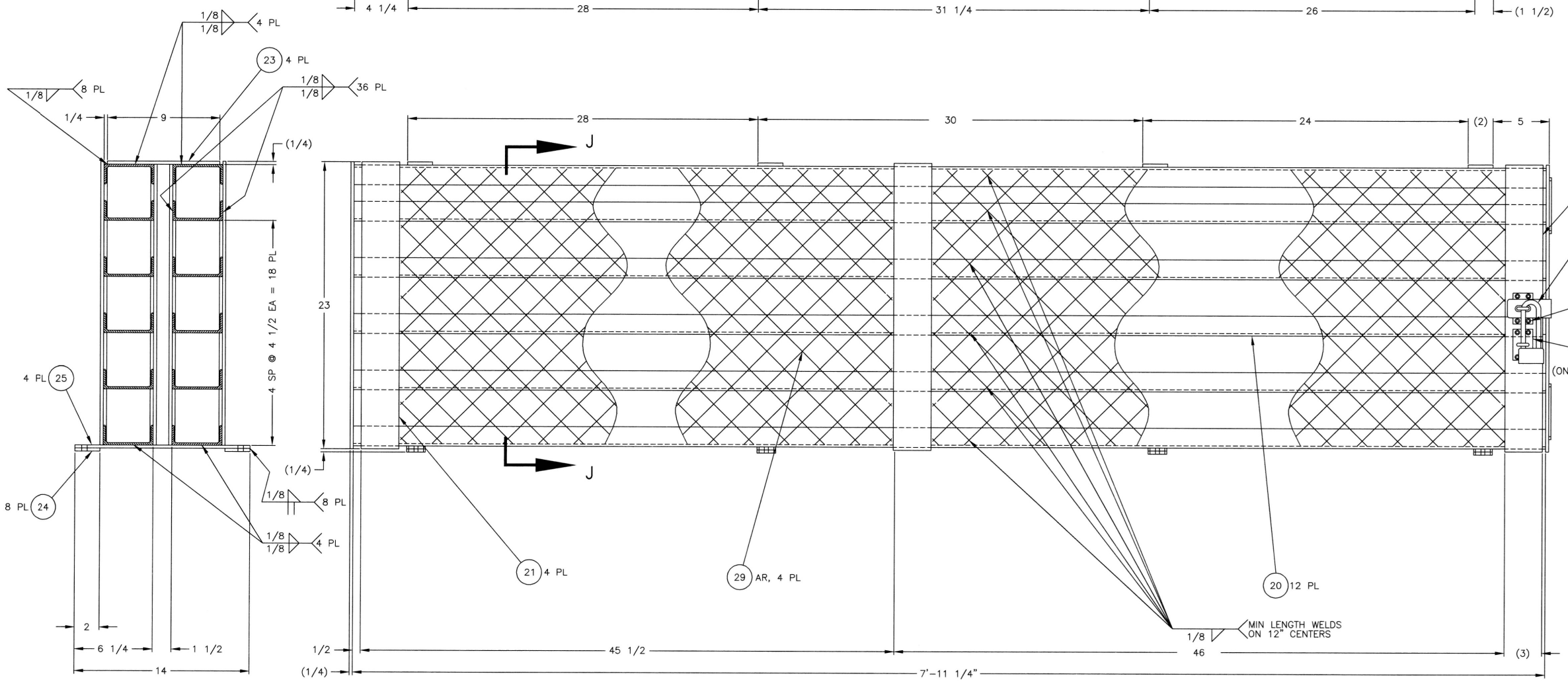

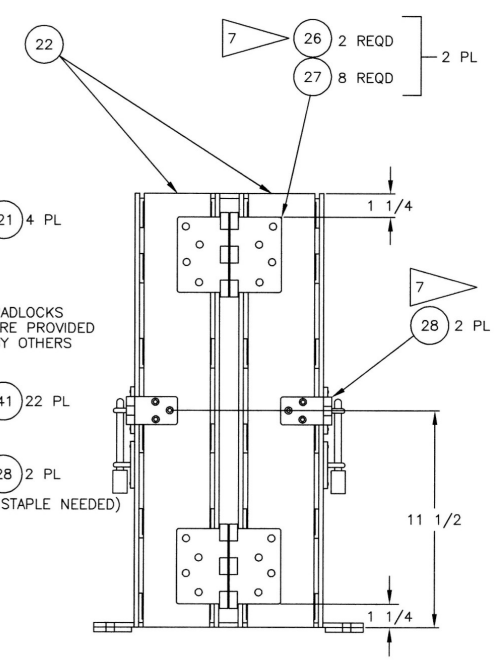

FOR GENERAL NOTES SEE SHEET 2
FOR PARTS LIST SEE SHEET 1 & 2

SECTION J–J

4 DRILL STRING RACK ASSY

DWG NO	TITLE	REF NUMBER	TITLE
DRAWING TRACEABILITY LIST		REFERENCES	
		NEXT USED ON	

REV No	REV NO	DESCRIPTION	REV BY DATE	ENGR	COMPANY
RG	1	REVISED PER ECN 655630	RLM 2/00		
		REVISIONS			

NAME	DATE	COMPANY
DRAWN BY PM MCELROY	9/20/99	CGEDM
DESIGN AUTHORITY GP JANICEK		

U.S. DEPARTMENT OF ENERGY
Richland Operations Office

CORE SAMPLER
SUPPORT TRUCK
RST–A

SIZE	BLDG NO	INDEX NO	DWG NO	REV
F	200G	3902	H–2–829939	1
SCALE 1/4	EDT 624168		SHEET 8 OF	

LMHC

GTITLE3.DWG (03-99)

DWG NO H–2–829939 SH 8 OF REV 1

MAY 23 2000 4